Automatic Retainer

Code: RA

This retainer for large slides is actuated by the angle pin, ensuring smooth and easy movement with no excess force required. Reduces costs in machining and fitting. No need for complex retaining systems or expensive hydraulic systems. Retention of cam slides up to 2000 Kg. Offers a standard solution to the mould makers.

Attention! Cut the rod 0.5mm shorter than the slide height.

Material: 1.2510
Hardness: 56 ± 2 HRC

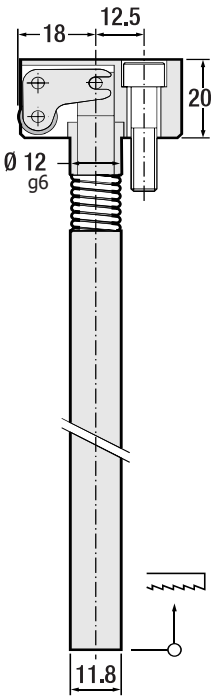

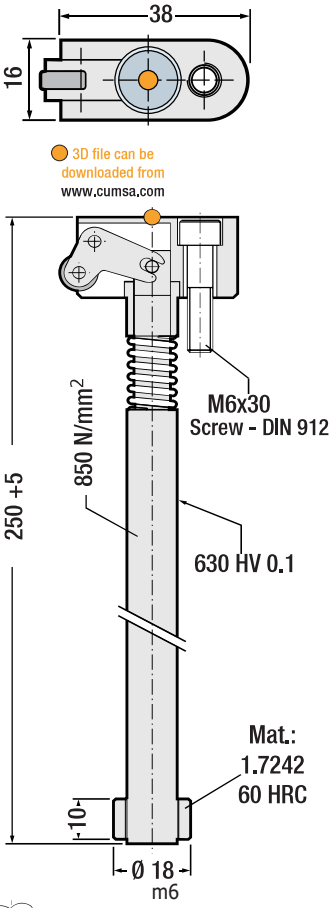

Order:
RA.163812

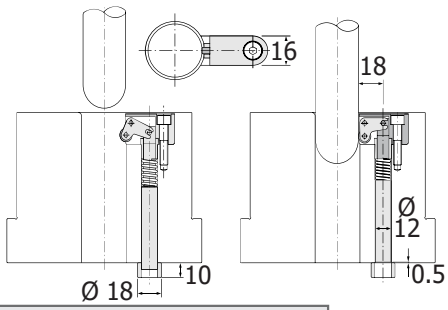

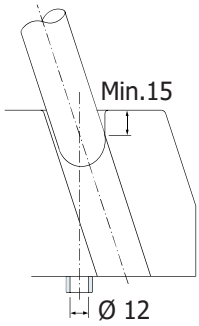

Page 222 Injection Moulds

Safety Strap

Code: BS

Keeps the mould closed when it is not in the machine.
The mould is unlocked automatically, when mounted on the machine.
Minimum space required for installation. Guarantees automatic opening and closing of the mould when loaded or unloaded from the machine.

Order	L	M	N	X
BS.075100	75	100	7	12^0

Material: 1.0503
Hardness: 53 ± 3 HRC

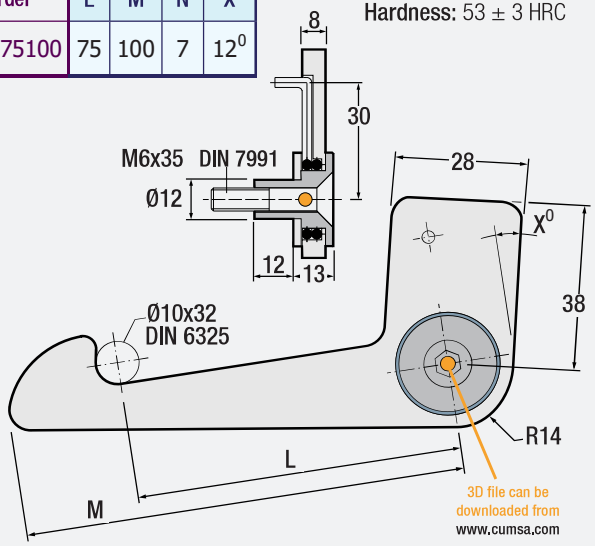

Strap Extender

Code: AB

Used where the cavity plate is thicker than 120 mm.

Order: **AB.302613**
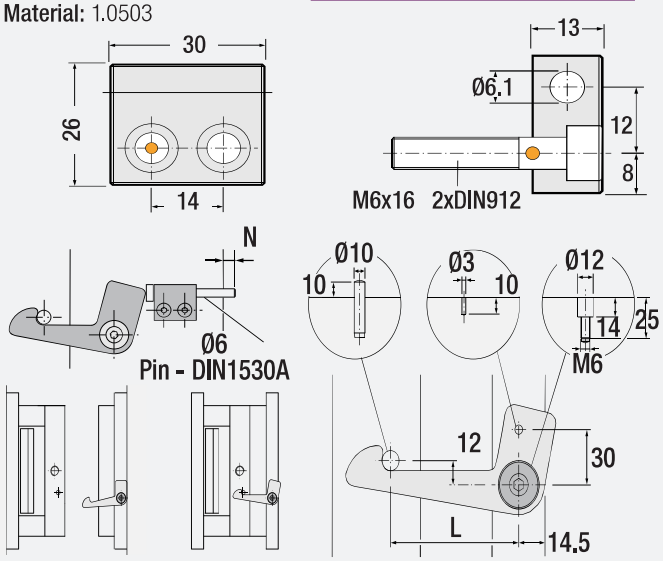
Material: 1.0503